Duration – 3 Hours **Total Marks: 80**

(1) N.B.:- Question no 1 is compulsory.
(2) Attempt any THREE questions out of remaining FIVE questions.
(3) Figures to the right indicate full marks.

Q.1.a) Solve $\left[y\left(1+\frac{1}{x}\right)+\cos y\right]dx+(x+\log x-x\sin y)\,dy=0$ (3)

b) Find the particular integral of $(D^2-2D+1)y=xe^x\sin x$ (3)

c) Evaluate $I=\int_0^{\pi/4}(1+\cos 4\theta)^5\,d\theta$ (3)

d) Prove that $E\nabla=\nabla E$ (3)

e) Evaluate $\int_0^1\int_{y^2}^1\int_0^{1-x} x\,dx\,dy\,dz$ (4)

f) Using Euler's method, find the approximate value of y, where $\frac{dy}{dx}=\frac{y-x}{\sqrt{xy}}$ with y(1) = 2 when x = 1.5 in five steps taking h = 0.1 (4)

Q.2 a) Solve $dr+(2r\cot\theta+\sin 2\theta)d\theta=0$ (6)

b) Evaluate $\int_0^\infty \frac{e^{-x}}{x}\left(1-e^{-ax}\right)dx \qquad (a>-1)$ (6)

c) Change to polar and evaluate $I=\int_0^a\int_{\sqrt{ax-x^2}}^{\sqrt{a^2-x^2}}\frac{dxdy}{\sqrt{(a^2-x^2-y^2)}}$ (8)

Q.3 a) Evaluate $I=\int_0^1 x^4\cos^{-1}x\,dx$ (6)

b) Evaluate $\iiint\frac{dxdydz}{x^2+y^2+z^2}$ throughout the volume of the sphere $x^2+y^2+z^2=a^2$ (6)

c) Apply method of variation of parameter to solve $\frac{d^2y}{dx^2}+2\frac{dy}{dx}+y=e^{-x}\log x$ (8)

Q. 4 a) Find the mass of a plate in the form of a cardioid $r = a(1-\cos\theta)$, if the density at any point of the plate varies as its distance from the pole. (6)

b) Solve $\frac{d^2y}{dx^2} - 4\frac{dy}{dx} + 3y = 2xe^{3x} + 3e^x \cos 2x$ (6)

c) Using fourth order Runge-Kutta method, solve numerically, the differential equation $\frac{dy}{dx} = xy$ with the given condition y(1) =2, find y at x=1.2,1.4 (8)

Q. 5 a) Evaluate $\iint xy\, dxdy$ over the region bounded by $x^2 + y^2 - 2x = 0,\ y^2 = 2x$ and $y = x$ (6)

b) A resistance of 100 Ω and inductance of 0.5 H are connected in series with a battery of 20 V. Find the current at any instant if the relation between L, R, E is $L\frac{di}{dt} + Ri = E$ (6)

c) Evaluate $\int_0^1 \frac{dx}{1+x}$ by using (i) Trapezoidal Rule, (ii) Simpson's $(1/3)^{rd}$ Rule and (iii) Simpson's $(3/8)^{th}$ Rule. Compare the result with exact solution. (8)

Q. 6 a) Solve $(3x+2)^2 \frac{d^2y}{dx^2} + 3(3x+2)\frac{dy}{dx} - 36y = 3x^2 + 4x + 1$ (6)

b) Show that the length of the parabola $y^2 = 4ax$ from the vertex to the end of the latus rectum is $a\left[\sqrt{2} + \log\left(1+\sqrt{2}\right)\right]$ (6)

c) Find the volume bounded by the paraboloid $x^2 + y^2 = az$ and the cylinder $x^2 + y^2 = a^2$ (8)

SEM III (CBSGS)

Paper / Subject Code: 29602 / Applied Physics - II. / MAY 2019

Time: 2 Hrs **Marks : 60**

N.B. 1) Question **No 1** is compulsory.
2) Attempt any three questions from the remaining questions.
3) Assume suitable data and symbols if required.
4) Figures on the right indicate full marks.

Q.1 Attempt any **FIVE.** (15)

a) What is Rayleigh's criterion of resolution? Define resolving power of grating.

b) A superconductor has a critical temperature 3.7^0 K. At 0^0K the critical magnetic field is 0.0306 Tesla. What is the critical magnetic field at temperature 2.0^0K?

c) An electron is bound in a one dimensional potential well of width 2 A^0 but of infinite height. Find its energy values in the ground state and first excited state?

d) What are the advantages of use of optical fibre in communication system?

e) Explain measurement of frequency of AC signal using CRO.

f) What is acronym of 'LASER'? How are they different than ordinary rays?

g) What do you understand by a thin film? Comment on the colours in thin film in sunlight.

Q.2 a) Prove that the diameter of nth dark ring is proportional to square root of natural number in case of reflected system. What will be the order of the dark ring which will have double the diameter of the 40th dark ring? (8)

b) A multimode step index optical fibre has core radius of 3 μm and its core refractive index is 1.45. Calculate i) refractive index of cladding ii) acceptanceangle iii) the number of modes propagating through fibre when wavelength of light is 1μm. (7)

Q.3 a) With neat energy level diagram explain principle, construction & working of He-Ne laser? (8)

b) Derive the condition for a thin transparent film of constant thickness to appear bright and dark when viewed in reflected light. (7)

Q.4 a) What is the highest order spectrum which can be seen with monochromatic light of wavelength 6000 A^0 by means of diffraction grating with 5000 lines/cm. (5)

b) Derive Schrodinger's time dependent wave equation for matter waves. (5)

c) Distinguish between Type I and Type II superconductors? (5)

Q.5 a) Show that electron cannot exist inside the nucleus using Heisenberg's uncertainty principle. (5)

b) A plane transmission grating having 6000 lines/cm is used to obtain a spectrum of light from a sodium lamp in the second order. Calculate the angular separation between the two sodium lines whose wavelengths are 5890 A^0& 5896 A^0? (5)

c) With neat diagram explain construction & working of Scanning Electron Microscope. (5)

Q.6 a) What are carbon nano tubes & what are their properties? (5)

b) Derive Bethe's law for electron refraction? (5)

c) The electron which is at rest is accelerated through a potential difference of 200V. Calculate i) the velocity of electron ii) De-Broglie wavelength (5)

****

[Time: 2 Hours] **[Marks:60]**

Please check whether you have got the right question paper.

N.B:
1. Question No.1 is compulsory.
2. All questions carry equal marks.
3. Answer any three questions from remaining five questions.
4. Atomicweights:(Ca=40,Mg=24,Cl=35.5,S=32,H=1,C=12,O=16,Na=23,N=14,Al =27,Fe=56, Ba =137.3)

Q.1) Answer any **five** from the following: - **[15 M]**

a) Differentiate between anodic and cathodic coatings.

b) What is the significance of proximate analysis of coal?

c) Give Composition, Properties and Uses of **Duralumin.**

d) Mention any four properties of composite materials.

e) State any six principles in green chemistry.

f) What are the main constituents of paints?

g) 2.5 g of the coal sample in a Bomb-calorimeter experiment gave 0.82g $BaSO_4$. Calculate percentage of S in the coal sample.

Q.2] a) Explain the mechanism of following types of corrosion:- **[06M]**
i) Pitting corrosion ii) Galvanic cell corrosion

b) Write informative note on Fixed bed catalytic cracking. **[05M]**

c) Calculate % Atom Economy for the following reaction **[04M]**

$$C_6H_5CHO + CH_3CHO \xrightarrow{NaoH} C_6H_5CH{=}CHCHO + H_2O$$

Q.3] a)) A fuel sample has the following composition: H_2=15%, CH_4 =25%, C_2H_4 = 30%, CO = 15%, CO_2 = 3%, and remaining nitrogen. Calculate the volume of oxygen and air required for complete combustion of 5 m^3 of fuel. **[06M]**

b) Explain Conventional and Greener route for synthesis of Indigo dye. Mention the green Chemistry principle involved. **[05M]**

c) Discuss the following factors influencing the rate of corrosion:

i) Nature of oxide film ii) Moisture **[04M]**

Q.4] a) What are alloys? Explain the purpose of making alloys. **[06M]**

b) What is the principle of cathodic protection? Explain any one protection method. **[05M]**

c) Write note on 'Particle reinforced composites' **[04M]**

Q.5] Write informative note on Biodiesel. **[06M]**

b) What is powder metallurgy? Explain hot compaction method. **[05M]**

c) Write a note on dispersed phase of composite materials. **[04M]**

Q.6] a) Define corrosion. Explain the mechanism of electrochemical corrosion in acids. **[05M]**

b) A coal sample contains, C=70%, O=23%, H= 5%,N=0.4 and remaining Ash. Calculate the GCV and NCV of given coal sample. **[05M]**

c) Write a note on:- **[05M]**

i) powder injection moulding ii) Sintering

****

17E36DB05955128D9E32F0CE5F168C56

Time: 3 Hours **Marks: 80**

N.B

(1) Question no. 1 is compulsory.
(2) Attempt any 3 from the remaining questions.
(3) Assume suitable data if necessary.
(4) Figures to right indicate full marks.

Q.1 a. Attempt multiple choice questions. **10**

i. Which of the following is valid variable name?
(a) case (b) int_rate2 (c) 2sum (d) for

ii. The operator -- is a
(a)Unary operator (b) Binary operator (c) Ternary operator (d)Conditional operator

iii. Control automatically passes to the beginning of loop by using
(a) break statement (b) goto statement (c) continue statement (d) none of these

iv. '&' is a ---------- operator.
(a) Unary operator (b) Value operator (c) Address operator (d) none of these

v. do.....while is _____ control loop.
(a) exit (b)entry (c) count (d)all of these

vi. Which is the correct way to declare a pointer?
(a) int *ptr (b) int ptr* (c) * int ptr (d) none of these

vii. Which of the following belongs to derived data type.
(a) structures (b)union (c)pointers (d) all of the above

viii. Which function used to write a character to a file
(a)fputc() (b)fgetc() (c) fputs() (d)fwrite()

ix. Each case statement in switch () is separated by
(a) break (b) continue (c) goto (d) none of these

x. Which of the following #define statement is valid?
(a) #define x=10 (b) #define x 10; (c) #define x 10 (d) # Define x 10

b. a. Convert the mathematical expression into equivalent C expression **03**

i. $$a = \frac{xy + z\left(\frac{x}{y}\right) + zy}{x + y + z}$$

ii. $$r = \frac{2v + 6.22(c + d)}{g + v} + \frac{3}{c/d}$$

iii. $a = x^{y^z}$ [hint: use function from math library]

c. If x ,y and z are int variable then evaluate the following expression and give final value of x,y ,z and p. **02**

x =10, y =6, z=8

i. p = x-- +y--+--z/(x*x)

ii. p = --x + ++y *z--;

d. Compare structure and union with proper example. **02**

e. Explain pointers with example. How array is related with pointers? **03**

Q.2 a. What is function? What do mean by calling function and called function? What are function parameters? Using return statement can we return multiple values to calling function? If no then what solution is available? Explain with example. **12**

b. Explain break and continue statements with suitable example. **08**

Q.3 a. WAP to sort the array in ascending order. **10**

b. WAP to accept a string and count no. of vowels and consonants, spaces, digits and special characters in it. **06**

c. WAP to find maximum of three numbers using conditional operator. **04**

Q.4 a. Create a structure Patient having ID, patient_name and disease_name as data members. WAP to read details of 10 patients and print details of those patients having 'diabetes'. **12**

b. What is a file? What are different types of files? Explain the following file handling functions in c. **08**

i) fopen () ii) fprintf () iii) fscanf () iv) fgets() v)fputs() vi) fclose()

Q.5 a. WAP to check whether entered matrix is symmetric or not. **10**

b. Explain difference between auto and static storage class with suitable example. **05**

c. WAP to print a pattern **05**

```
    *
   * *
  * * *
 * * * *
```

Q.6 a. What is recursion? How it is different from iteration? WAP to compute factorial of a number using recursion. **12**

b. WAP to print Fibonacci series upto n. [Note: n entered by user, use iterative stmt] **08**

(3 Hours) **Marks : 60**

Instructions:

1. Question no 1 is compulsory.
2. Answer any three questions from the remaining five.
3. All dimensions are in millimeters.
4. Retain all construction lines.
5. Use scale 1:1 only.
6. Figures to the right indicate full marks.
7. Use first angle method of projection only.
8. Assume suitable additional data, if necessary and mention it clearly.

Q1 a) A circle of diameter 60 mm rolls without slipping on a vertical surface for half revolution and then on a horizontal surface for remaining half revolution. Draw the locus of a point "P" which is initially in contact with wall. Name the curve. **6**

b) Figure given below shows pictorial view of an object. Draw the following views-

Front view **5**

Top view **4**

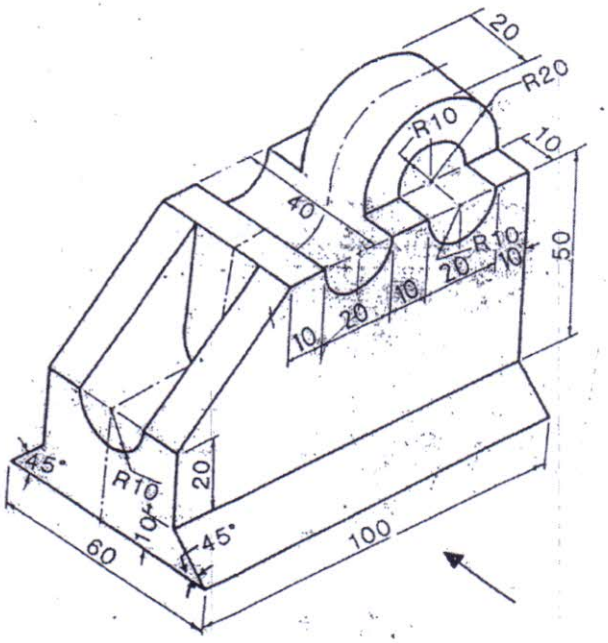

Q2 Figure below shows pictorial view of an object. Draw the following views-

Sectional Front view	**5**
Top view	**4**
Side view from left	**4**
Give 10 major dimensions	**2**

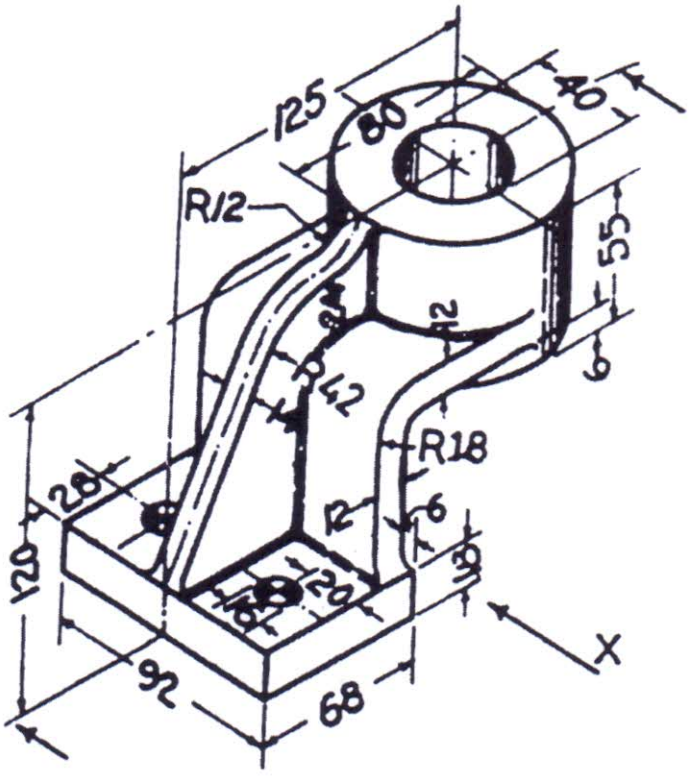

Q3 A hexagonal pyramid, base 25 mm side and axis 55mm long, has one of its slant edges on the H P. A vertical plane containing that edge and axis is inclined at 45^0 to VP. Draw its projections when the apex is nearer the VP.
(Stage 1: 3 marks, stage 2: 5 marks, stage 3: 7 marks)

Q4 A pentagonal pyramid side of base 30 mm, axis 60mm is resting on its base on HP with one edge of base parallel to VP and nearer to VP. A vertical section plane inclined at 45^0 to VP cuts the pyramid at a distance of 9 mm from the axis. Draw

Sectional front view	3
Top view	3
True shape of section	3
and development of lateral surface of retained part of the pyramid.	6

Q5 a) draw the projections of a cylinder 60 mm diameter and 70 mm long, lying on HP on its curved surface with its axis inclined at 30^0 to VP. (and parallel to HP) (Stage 1: 2 marks, Stage 2: 4 marks)

b) The front view and top view of an object are shown in figure below. Draw its isometric view.

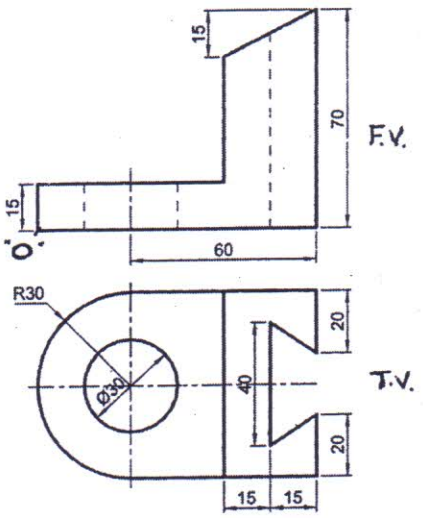

Q.5 (b)

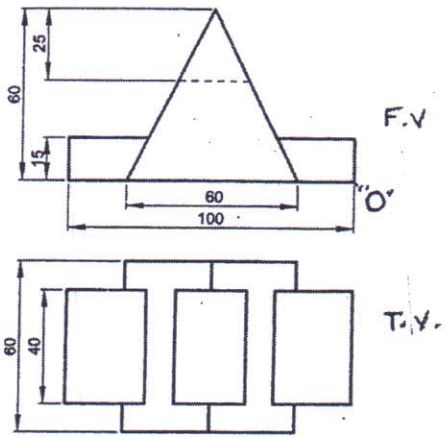

Q.6 (b)

Q6 a) The top view of a 75 m long line AB measures 65 mm, while the length of its front view is 50 mm. It's one end A is in the HP and 12 mm in front of VP. Draw its projections and determine its inclinations with HP and VP. **8**

b) The front view and top view of an object are shown in figure above. Draw its isometric view. **7**
